VSCSE Summer School 2008

Accelerators for Science and Engineering Applications – GPUs and Multi-cores

Lecture 3: CUDA Threads

Block IDs and Thread IDs

- Each thread uses IDs to decide what data to work on
  - Block ID: 1D or 2D
  - Thread ID: 1D, 2D, or 3D
- Simplifies memory addressing when processing multidimensional data
  - Image processing
  - Solving PDEs on volumes
  - …

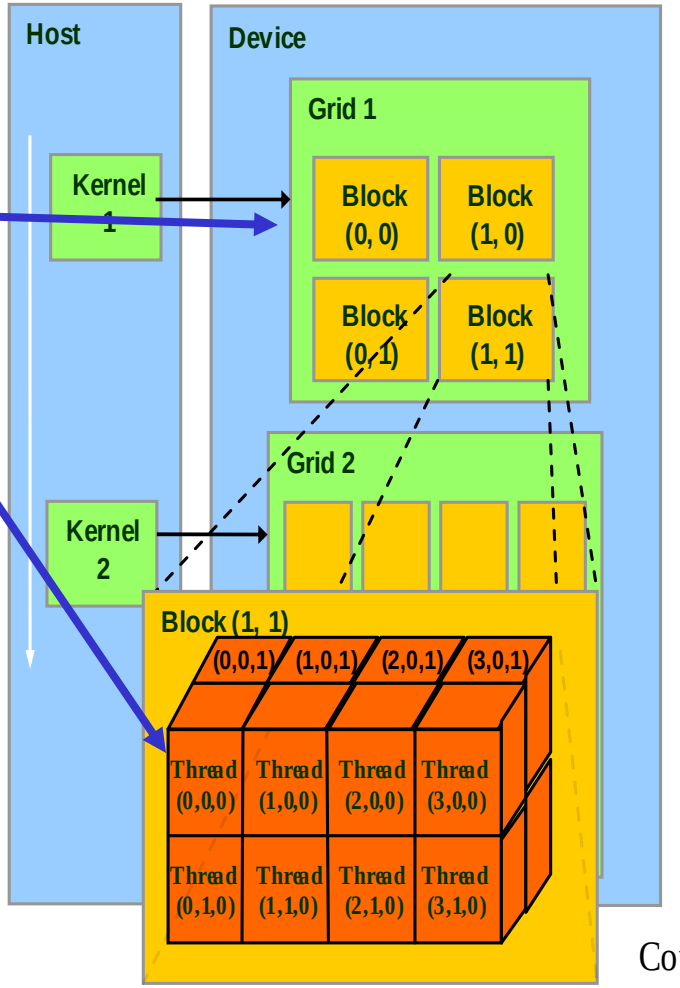

Courtesy: NDVIA

Matrix Multiplication Using Multiple Blocks

- Break-up Pd into tiles
- Each block calculates one tile
  - Each thread calculates one element
  - Block size equal tile size

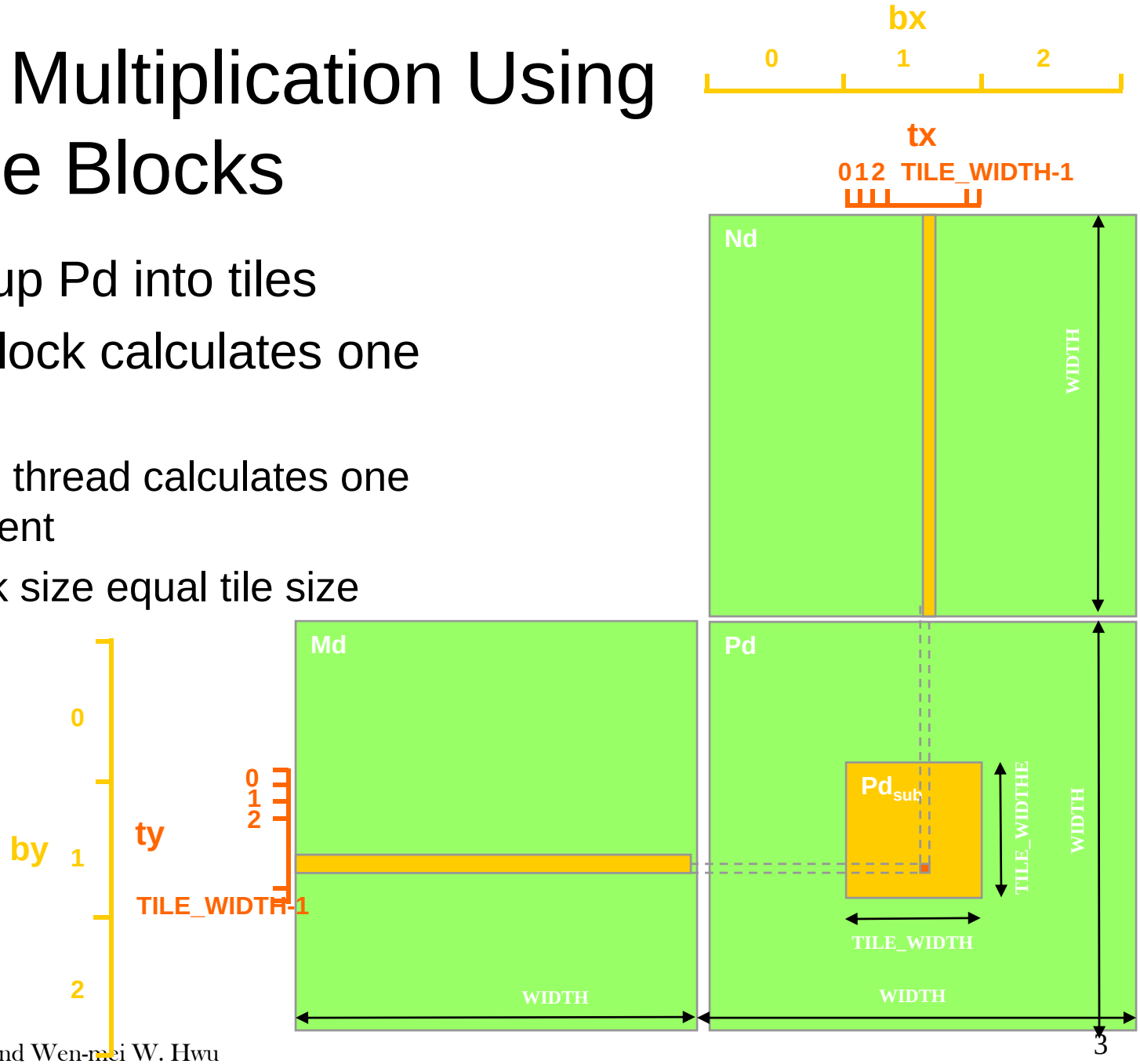

A Small Example

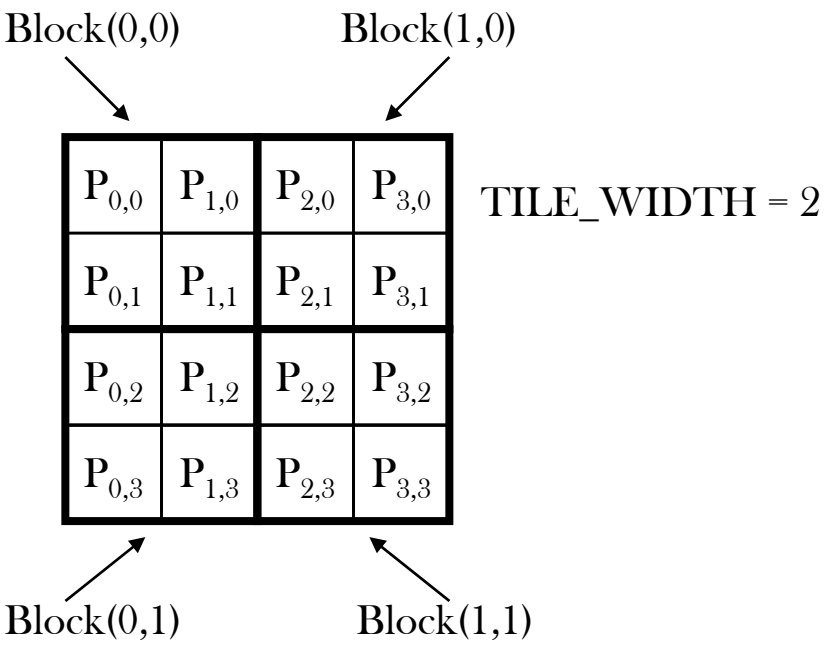

A Small Example: Multiplication

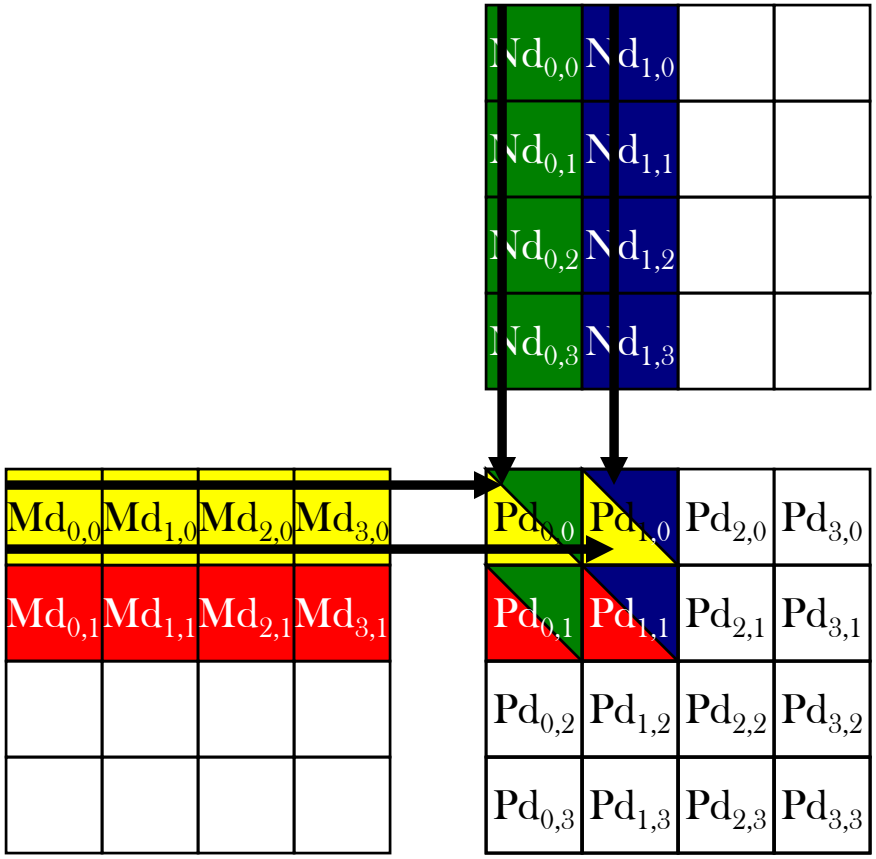

Revised Matrix Multiplication Kernel using Multiple Blocks

```
__global__ void MatrixMulKernel(float* Md, float* Nd, float* Pd, int Width)
{
// Calculate the row index of the Pd element and M
int Row = blockIdx.y*TILE_WIDTH + threadIdx.y;
// Calculate the column idenx of Pd and N
int Col = blockIdx.x*TILE_WIDTH + threadIdx.x;

float Pvalue = 0;
// each thread computes one element of the block sub-matrix
for (int k = 0; k < Width; ++k)
  Pvalue += Md[Row*Width+k] * Nd[k*Width+Col];

Pd[Row*Width+Col] = Pvalue;
}
```

CUDA Thread Block

- All threads in a block execute the same kernel program (SPMD)
- Programmer declares block:
  - Block size 1 to **512** concurrent threads
  - Block shape 1D, 2D, or 3D
  - Block dimensions in threads
- Threads have thread id numbers within block
  - Thread program uses thread id to select work and address shared data
- Threads in the same block share data and synchronize while doing their share of the work
- Threads in different blocks cannot cooperate
  - Each block can execute in any order relative to other blocs!

CUDA Thread Block

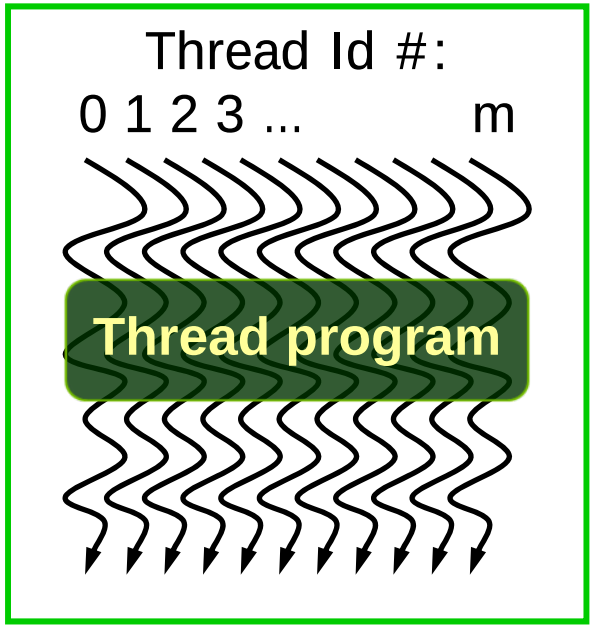

Courtesy: John Nickolls, NVIDIA

Transparent Scalability

- Hardware is free to assigns blocks to any processor at any time
  - A kernel scales across any number of parallel processors

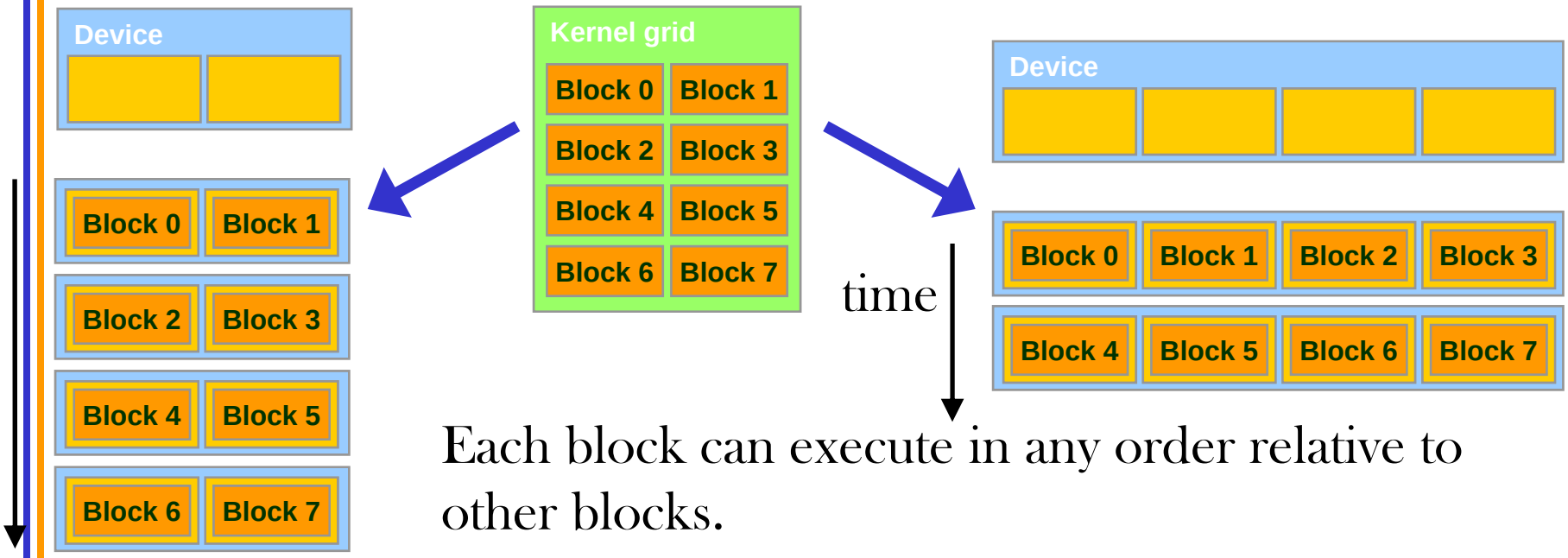

Each block can execute in any order relative to other blocks.

G80 Example: Executing Thread Blocks

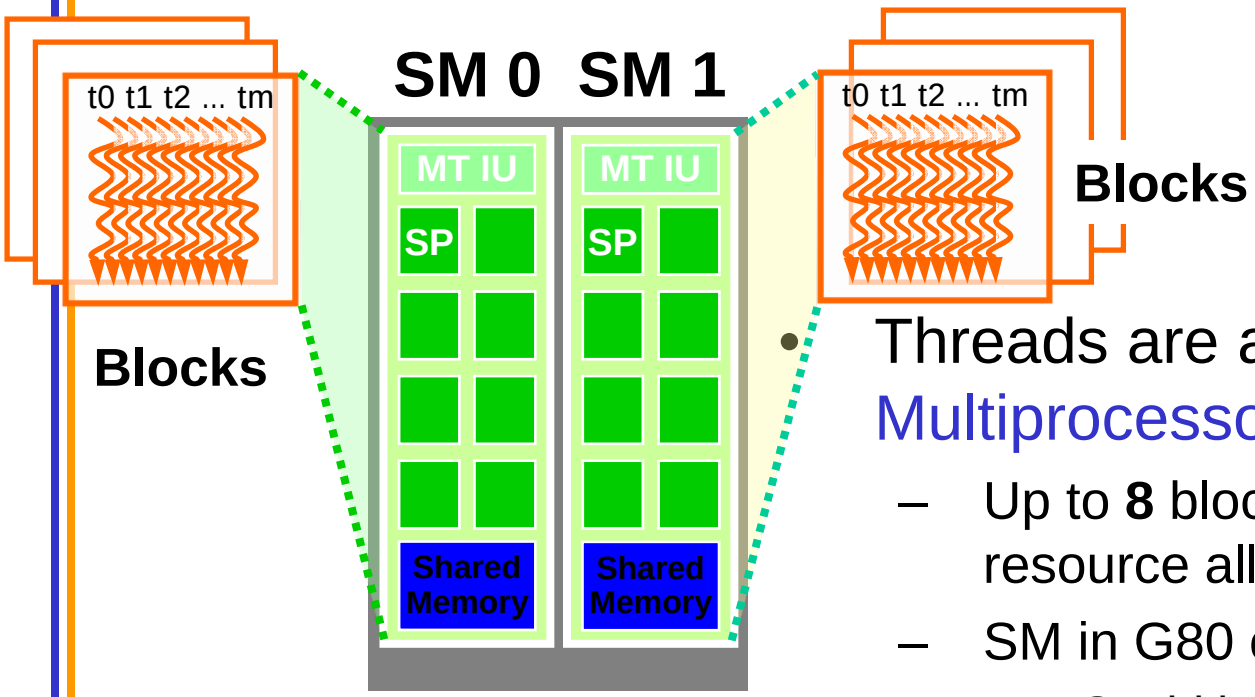

- Threads are assigned to Streaming Multiprocessors in block granularity
  - Up to **8** blocks to each SM as resource allows
  - SM in G80 can take up to **768** threads
    - Could be 256 (threads/block) * 3 blocks
    - Or 128 (threads/block) * 6 blocks, etc.
- Threads run concurrently
  - SM maintains thread/block id #s
  - SM manages/schedules thread execution

G80 Example: Thread Scheduling

- Each Block is executed as 32-thread Warps
  - An implementation decision, not part of the CUDA programming model
  - Warps are scheduling units in SM
- If 3 blocks are assigned to an SM and each block has 256 threads, how many Warps are there in an SM?
  - Each Block is divided into 256/32 = 8 Warps
  - There are 8 * 3 = 24 Warps

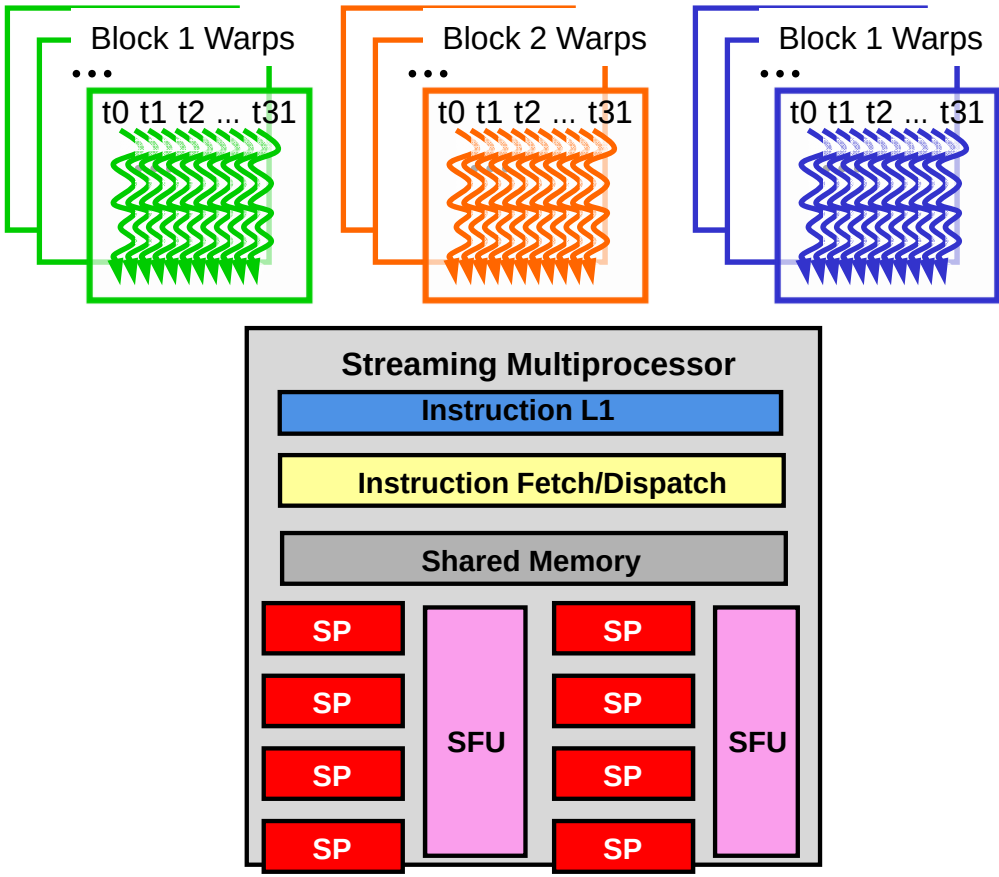

G80 Example: Thread Scheduling (Cont.)

- SM implements zero-overhead warp scheduling
  - At any time, only one of the warps is executed by SM
  - Warps whose next instruction has its operands ready for consumption are eligible for execution
  - Eligible Warps are selected for execution on a prioritized scheduling policy
  - All threads in a warp execute the same instruction when selected

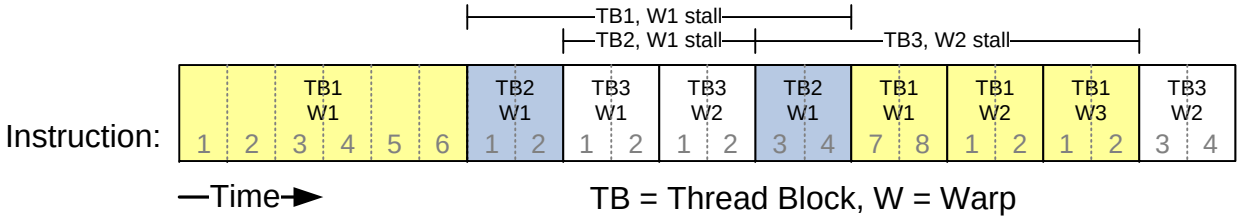

G80 Block Granularity Considerations

- For Matrix Multiplication using multiple blocks, should I use 8X8, 16X16 or 32X32 blocks?
  - For 8X8, we have 64 threads per Block. Since each SM can take up to 768 threads, there are 12 Blocks. However, each SM can only take up to 8 Blocks, only 512 threads will go into each SM!
  - For 16X16, we have 256 threads per Block. Since each SM can take up to 768 threads, it can take up to 3 Blocks and achieve full capacity unless other resource considerations overrule.
  - For 32X32, we have 1024 threads per Block. Not even one can fit into an SM!

Some Additional API Features

Application Programming Interface

- The API is an extension to the C programming language
- It consists of:
  - Language extensions
    - To target portions of the code for execution on the device
  - A runtime library split into:
    - A common component providing built-in vector types and a subset of the C runtime library in both host and device codes
    - A host component to control and access one or more devices from the host
    - A device component providing device-specific functions

Language Extensions: Built-in Variables

- **`dim3 gridDim;`**
  - Dimensions of the grid in blocks (**`gridDim.z`** unused)
- **`dim3 blockDim;`**
  - Dimensions of the block in threads
- **`dim3 blockIdx;`**
  - Block index within the grid
- **`dim3 threadIdx;`**
  - Thread index within the block

Common Runtime Component: Mathematical Functions

- `pow`, `sqrt`, `cbrt`, `hypot`
- `exp`, `exp2`, `expm1`
- `log`, `log2`, `log10`, `log1p`
- `sin`, `cos`, `tan`, `asin`, `acos`, `atan`, `atan2`
- `sinh`, `cosh`, `tanh`, `asinh`, `acosh`, `atanh`
- `ceil`, `floor`, `trunc`, `round`
- Etc.
  - When executed on the host, a given function uses the C runtime implementation if available
  - These functions are only supported for scalar types, not vector types

Device Runtime Component: Mathematical Functions

- Some mathematical functions (e.g. `sin(x)`) have a less accurate, but faster device-only version (e.g. `__sin(x)`)
  - `__pow`
  - `__log`, `__log2`, `__log10`
  - `__exp`
  - `__sin`, `__cos`, `__tan`

Host Runtime Component

- Provides functions to deal with:
  - Device management (including multi-device systems)
  - Memory management
  - Error handling

- Initializes the first time a runtime function is called

- A host thread can invoke device code on only one device
  - Multiple host threads required to run on multiple devices

Device Runtime Component: Synchronization Function

- **`void __syncthreads();`**
- Synchronizes all threads in a block
- Once all threads have reached this point, execution resumes normally
- Used to avoid RAW / WAR / WAW hazards when accessing shared or global memory
- Allowed in conditional constructs only if the conditional is uniform across the entire thread block